SR-700L
ROUGH TERRAIN CRANE

【SPECIFICATION】

■CRANE Specification

Maximum lifting capacity		70ton×2.5m
Boom length		10.0m — 44.5m (6 section)
Fly jib length		8.3m—13.2m (2 section, offset 7° — 60°)
Maximum rated lifting height		45.5m (Boom)
		58.6m (jib)
Hoisting line speed (winch up)	Main winch	160m / min. (at 5th layer)
	Auxiliary winch	150m / min. (at 4th layer)
Hoisting hook speed (winch up)	Main winch	(Parts of line; 16) : 10m / min. (at 5th layer)
	Auxiliary winch	(Parts of line; 1) : 150m / min. (at 4th layer)
Boom derricking angle		0° — 84°
Boom derricking time		66sec / (0° — 84°)
Boom extending speed		135sec (10.0m — 44.5m)
Slewing speed		1.8min^{-1}
Tail slewing radius		3,550mm

●Equipment and structure

Boom type		Box-shaped, 6-section hydraulically telescopic type (Boom section 2 / 3, 4 / 5 / 6 simultaneously operated)
Jib type		2 sections (2nd section of hydraulically terescopic type) (offset angles 7° — 60°)
Boom extension/ retraction equipment		Three hydrauric cylinders and wire ropes used together
Boom derricking/lowering equipment		Two hydraulic cylinders of direct acting type with pressure-compensated flow control valve
Winch system Main & Auxiliary winches		Driven by axial plunger type hoisting motor through planetary gear reduction. Controlled independently by respective operating lever. Equipped with automatic brake.
Slewing equipment		Ball bearing type
Outriggers	Type	Hydraulic H-beam type (with float and vertical cylinder in single unit)
	Extension width	7,600mm (Fully extended)
		7,200mm (Intermediately extended)
		6,500mm (Intermediately extended)
		5,400mm (Intermediately extended)
		4,300mm (Intermediately extended)
		2,690mm (Fully retracted)
Wire rope for hoisting	Main winch	Diameter: 18mm×Length: 240m
	Auxiliary winch	Diameter: 18mm×Length: 125m

●Hydraulic equipment

Oil pump		4 pumps, plunger type
Hydraulic motor	Hoisting motor	Axial plunger type
	Slewing motor	Axial plunger type
Control valve		Double acting with integral check and relief valves
Cylinder		Double acting type
Oil reservoir capacity		740L

●Safety devices

ACS (Automatic Crane System with voice alarm), Slewing automatic stop system, Boom raise / lower dampening function, Boom extension / retraction dampening function, Outrigger status detector, Boom derricking / telescoping holding valve, Overhoist prevention device, Drum lock device (on aux. winch), Winch holding valve, Automatic winch brake, Winch drum roller, Hydraulic safety valves, Outrigger lock pins, Slewing lock, Joystick control safety stop system, Hydraulic oil temperature warning device, Hydraulic oil return filter warning device

●Standard equipment

Hydraulic oil cooler,Working light (on boom, table and cab), Winch drum turning indication device, Hook for 34 ton, Hook for 5ton

●Operator's cab

All steel welded construction, 1 person, Rubber mounted, Adjustable steering wheel, Adjustable seat, Seat belt, Front windscreen wiper & washer (2 speed wiper), Roof window wiper & washer, Cigarette lighter, Ashtray, Floor mat

●Optional equipment

Winch view camera, Hook for 70 / 48 ton, Slewing warning buzzer, Winch over unwinding device, Cab heater, Cab cooler, Fan, AM/FM Radio, Fire extinguisher, ACS outside indicator

■CARRIER Specification

Maximum traveling speed		49km/h
Gradeability (tan θ)		60% (computed at G.V.W. = 39,750kg)
Minimum turning radius (center of extreme outer tire)		11.2m (2 wheel steer)
		6.44m (4 wheel steer)

●Engine

Model		Mitsubishi 6D24-TLE2A
Type		4 cycle, 6 cylinders, water cooled, direct injection turbo-charged diesel engine with intercooling
Piston displacement		11.945L
Max. power		257kW at 2,200min^{-1}
Max. torque		1,275N·m at 1,500min^{-1}

Fuel due to KATO's recommendation only

●Equipment and structure

Drive system		4×4
Torque converter		Engine mounted 3 elements 1 stage (with lock up clutch)
Transmission		Remote mounted full automatic 6 forward & 2 reverse speed with transfer differential
Number of speeds		6 forward & 2 reverse speed
Axles	Front	Planetary, drive/steer type
	Rear	Planetary, drive/steer type
Suspension	Front & Rear	Hydro-pneumatic suspension Hydraulic locking device with suspension cylinder
Brake system	Service brake	Air-over hydraulic disk brake on 4 wheels (front and rear independent circuit)
	Parking brake	Spring applied, electrically air released parking brake mounted on front axle, internal expanding type
	Auxiliary brake	Exhaust brake, Hydraulic retarder
Steering		Full hydraulic power steering Completely independent front and rear steering (with automatic rear wheel steering lock system)
Tire size	Front	505 / 95 R25 183E ROAD
	Rear	505 / 95 R25 183E ROAD
Fuel tank capacity		300 L
Batteries		(12V—150AH)×2

●Safety devices

Emergency steering device, Rear wheel steering lock system (automatic), Mis-shifting prevention system, Brake fluid leak warning device, Service brake lock, Suspension lock, Engine overspeed alarm, Radiator coolant level warning device, Air filter service warning device

●Standard equipment

Centralized lubricating system, Bypass oil filter

●Optional equipments

Yellow rev. light, Rear view camera, Side view camera

■GENERAL Dimensions

Overall length		12,590mm
Overall width		2,990mm
Overall height		3,680mm
Wheel base		5,300mm
Treads	Front	2,410mm
	Rear	2,410mm
Passenger capacity		One person
Gross vehicle mass	Gross weight	approx. 39,750kg
	Front weight	approx. 19,850kg
	Rear weight	approx. 19,900kg

- Stow the hooks in place before traveling.
- Before you use this machine, read the precautions in the instruction manual thoroughly to operate it correctly.
- KATO products and specifications are subject to improvements and changes without notice.

شرکت ایمن مرکزی اروند (سهامی خاص)
نمایندگی رسمی فروش و خدمات پس از فروش
جرثقیل های کاتو و هیتاچی سومیتومو در ایران
62133000

(+98)021 8849-1119

■RATED LIFTING CAPACITY

Based on ISO 4305

10.0m — 44.5m Boom

(Unit : Metric ton)

Working radius (m)	(7.6m) Outriggers fully extended (7.6m) (over side and over rear)						
	10.0m Boom	16.9m Boom	23.8m Boom	30.7m Boom	37.6m Boom	41.5m Boom	44.5m Boom
2.5	70.00*	32.00	23.00	12.50			
3.0	61.00*	32.00	23.00	12.50			
3.5	55.00*	32.00	23.00	12.50	12.00		
4.0	49.20*	32.00	23.00	12.50	12.00	10.00	
4.5	44.10	32.00	23.00	12.50	12.00	10.00	8.00
5.0	39.50	32.00	23.00	12.50	12.00	10.00	8.00
5.5	35.70	32.00	23.00	12.50	12.00	10.00	8.00
6.0	32.50	30.50	22.00	12.50	12.00	10.00	8.00
6.5	29.50	28.50	20.60	12.50	12.00	10.00	8.00
7.0	26.80	26.00	19.30	12.50	12.00	10.00	8.00
7.5		24.00	18.20	12.50	12.00	10.00	8.00
8.0		22.00	17.20	12.50	12.00	10.00	8.00
9.0		17.50	15.40	12.50	12.00	10.00	8.00
10.0		14.00	13.80	12.50	10.90	10.00	8.00
11.0		11.40	11.20	11.30	10.00	9.20	8.00
12.0		9.40	9.20	10.30	9.20	8.40	8.00
13.0		7.90	7.65	8.70	8.40	7.80	7.30
14.0			6.40	7.40	7.80	7.20	6.80
15.0			5.35	6.35	7.00	6.60	6.30
16.0			4.50	5.45	6.10	6.20	5.80
17.0			3.80	4.75	5.30	5.55	5.40
18.0			3.15	4.10	4.65	4.90	5.00
19.0			2.60	3.55	4.10	4.35	4.50
20.0			2.15	3.05	3.60	3.85	4.00
21.0				2.60	3.15	3.40	3.55
22.0				2.25	2.75	3.00	3.15
24.0				1.60	2.10	2.30	2.45
26.0				1.05	1.55	1.75	1.90
28.0					1.10	1.30	1.45
30.0					0.75	0.95	1.05
32.0						0.60	0.70
33.0							0.55
Critical boom angle	—	—	—	—	*28°*	*33°*	*37°*
Standard hook	for 70*/48 ton	for 34 ton					
Hook mass	530*/470kg	330kg					
Parts of line	16*/10	7	5	4	4	4	4

(Unit : Metric ton)

Working radius (m)	(7.2m) Outriggers intermediately extended (7.2m) (over side)							(6.5m) Outriggers intermediately extended (6.5m) (over side)						
	10.0m Boom	16.9m Boom	23.8m Boom	30.7m Boom	37.6m Boom	41.5m Boom	44.5m Boom	10.0m Boom	16.9m Boom	23.8m Boom	30.7m Boom	37.6m Boom	41.5m Boom	44.5m Boom
2.5	48.00	32.00	23.00	12.50				48.00	32.00	23.00	12.50			
3.0	48.00	32.00	23.00	12.50				48.00	32.00	23.00	12.50			
3.5	48.00	32.00	23.00	12.50	12.00			46.00	32.00	23.00	12.50	12.00		
4.0	46.00	32.00	23.00	12.50	12.00	10.00		42.00	32.00	23.00	12.50	12.00	10.00	
4.5	42.00	32.00	23.00	12.50	12.00	10.00	8.00	38.00	32.00	23.00	12.50	12.00	10.00	8.00
5.0	38.50	32.00	23.00	12.50	12.00	10.00	8.00	34.50	32.00	23.00	12.50	12.00	10.00	8.00
5.5	35.00	32.00	23.00	12.50	12.00	10.00	8.00	31.50	32.00	23.00	12.50	12.00	10.00	8.00
6.0	32.00	30.50	22.00	12.50	12.00	10.00	8.00	29.00	30.50	22.00	12.50	12.00	10.00	8.00
6.5	29.50	28.50	20.60	12.50	12.00	10.00	8.00	25.00	25.80	20.60	12.50	12.00	10.00	8.00
7.0	26.80	26.00	19.30	12.50	12.00	10.00	8.00	21.50	21.80	19.30	12.50	12.00	10.00	8.00
7.5		23.10	18.20	12.50	12.00	10.00	8.00		18.80	18.20	12.50	12.00	10.00	8.00
8.0		20.50	17.20	12.50	12.00	10.00	8.00		16.40	16.20	12.50	12.00	10.00	8.00
9.0		16.00	15.40	12.50	12.00	10.00	8.00		12.90	12.70	12.50	12.00	10.00	8.00
10.0		12.70	12.40	12.50	10.90	10.00	8.00		10.30	10.00	11.25	10.90	10.00	8.00
11.0		10.30	10.10	11.10	10.00	9.20	8.00		8.40	8.10	9.30	9.80	9.20	8.00
12.0		8.50	8.25	9.25	9.20	8.40	8.00		6.85	6.60	7.70	8.40	8.40	8.00
13.0		7.10	6.85	7.80	8.40	7.80	7.30		5.65	5.40	6.45	7.10	7.20	7.30
14.0			5.70	6.65	7.25	7.20	6.80			4.45	5.45	6.05	6.35	6.50
15.0			4.75	5.65	6.30	6.55	6.30			3.60	4.60	5.20	5.45	5.60
16.0			3.95	4.85	5.45	5.70	5.80			2.90	3.90	4.50	4.75	4.90
17.0			3.30	4.15	4.75	5.00	5.15			2.35	3.30	3.85	4.10	4.25
18.0			2.70	3.55	4.15	4.40	4.55			1.85	2.75	3.35	3.55	3.70
19.0			2.20	3.05	3.60	3.85	4.00			1.40	2.30	2.85	3.10	3.25
20.0			1.75	2.60	3.15	3.40	3.50			1.00	1.90	2.45	2.70	2.80
21.0				2.20	2.75	2.95	3.10				1.55	2.10	2.30	2.45
22.0				1.85	2.40	2.60	2.75				1.25	1.75	2.00	2.10
24.0				1.25	1.75	1.95	2.10				0.70	1.20	1.45	1.55
26.0				0.75	1.25	1.45	1.60					0.75	0.95	1.10
28.0					0.85	1.05	1.15						0.60	0.70
30.0						0.65	0.80							
31.0							0.65							
Critical boom angle	—	—	—	—	*35°*	*38°*	*41°*	—	—	—	*25°*	*40°*	*43°*	*47°*
Standard hook	for 48 ton	for 34 ton						for 48 ton	for 34 ton					
Hook mass	470kg	330kg						470kg	330kg					
Parts of line	10	7	5	4	4	4	4	10	7	5	4	4	4	4

(Unit : Metric ton)

Working radius (m)	(5.4m) Outriggers intermediately extended (5.4m) (over side)							(4.3m) Outriggers intermediately extended (4.3m) (over side)							(2.69m) Outriggers completely retracted (blocked on vartical cylinders) (over side)		
	10.0m Boom	16.9m Boom	23.8m Boom	30.7m Boom	37.6m Boom	41.5m Boom	44.5m Boom	10.0m Boom	16.9m Boom	23.8m Boom	30.7m Boom	37.6m Boom	41.5m Boom	44.5m Boom	10.0m Boom	16.9m Boom	23.8m Boom
2.5	48.00	32.00	23.00	12.50				38.00	30.00	23.00	12.50				20.00	15.00	12.00
3.0	48.00	32.00	23.00	12.50				38.00	30.00	23.00	12.50				20.00	15.00	12.00
3.5	46.00	32.00	23.00	12.50	12.00			38.00	30.00	23.00	12.50	12.00			18.00	15.00	12.00
4.0	42.00	32.00	23.00	12.50	12.00	10.00		31.00	29.60	23.00	12.50	12.00	10.00		14.00	13.70	12.00
4.5	38.00	32.00	23.00	12.50	12.00	10.00	8.00	24.00	24.30	20.80	12.50	12.00	10.00	8.00	11.30	11.00	9.90
5.0	32.20	30.60	23.00	12.50	12.00	10.00	8.00	20.00	19.40	17.60	12.50	12.00	10.00	8.00	9.30	9.00	8.30
5.5	25.90	25.20	22.40	12.50	12.00	10.00	8.00	16.50	16.00	15.10	12.50	12.00	10.00	8.00	7.80	7.40	7.00
6.0	21.50	20.90	19.30	12.50	12.00	10.00	8.00	13.90	13.40	13.00	12.50	12.00	10.00	8.00	6.60	6.50	5.90
6.5	18.20	17.60	16.90	12.50	12.00	10.00	8.00	11.90	11.40	11.30	11.60	11.50	10.00	8.00	5.60	5.20	5.00
7.0	15.70	15.10	14.80	12.50	12.00	10.00	8.00	10.40	9.80	9.70	10.40	10.35	10.00	8.00	4.80	4.40	4.20
7.5		13.10	12.90	12.50	12.00	10.00	8.00		8.60	8.40	9.30	9.30	9.20	8.00		3.70	3.50
8.0		11.50	11.30	12.10	11.90	10.00	8.00		7.50	7.30	8.30	8.40	8.40	8.00		3.20	2.90
9.0		9.00	8.80	9.95	10.00	9.90	8.00		5.80	5.60	6.60	6.95	7.00	7.00		2.15	
10.0		7.20	7.00	8.05	8.45	8.45	8.00		4.60	4.40	5.30	5.80	5.85	5.90		1.25	
11.0		5.80	5.55	6.65	7.15	7.25	7.25		3.50	3.30	4.30	4.80	4.90	4.95			
12.0		4.60	4.40	5.45	6.05	6.20	6.25		2.65	2.45	3.45	4.00	4.15	4.20			
13.0		3.70	3.50	4.50	5.10	5.35	5.40		1.95	1.70	2.70	3.30	3.50	3.55			
14.0			2.70	3.70	4.30	4.55	4.70			1.00	2.10	2.70	2.90	3.00			
15.0			2.10	3.05	3.60	3.85	4.00				1.55	2.15	2.40	2.50			
16.0			1.55	2.50	3.05	3.30	3.45				1.10	1.70	1.95	2.10			
17.0			1.10	2.00	2.55	2.80	2.90					1.30	1.55	1.70			
18.0			0.70	1.60	2.10	2.35	2.50										
19.0				1.20	1.75	1.95	2.10										
20.0				0.90	1.40	1.60	1.75										
21.0				0.60	1.10	1.30	1.45										
22.0					0.85	1.05	1.20										
Critical boom angle	—	—	*30°*	*40°*	*50°*	*54°*	*57°*	—	—	*46°*	*53°*	*60°*	*63°*	*65°*	—	*40°*	*64°*
Standard hook	for 48 ton	for 34 ton						for 48 ton	for 34 ton						for 48 ton	for 34 ton	
Hook mass	470kg	330kg						470kg	330kg						470kg	330kg	
Parts of line	10	7	5	4	4	4	4	10	7	5	4	4	4	4	10	7	5

(Unit : Metric ton)

Working radius (m)	Outriggers extended (over front)						
	10.0m Boom	16.9m Boom	23.8m Boom	30.7m Boom	37.6m Boom	41.5m Boom	44.5m Boom
2.5	70.00*	32.00	23.00	12.50			
3.0	61.00*	32.00	23.00	12.50			
3.5	55.00*	32.00	23.00	12.50	12.00		
4.0	49.20*	32.00	23.00	12.50	12.00	10.00	
4.5	44.10	32.00	23.00	12.50	12.00	10.00	8.00
5.0	39.50	32.00	23.00	12.50	12.00	10.00	8.00
5.5	35.70	32.00	23.00	12.50	12.00	10.00	8.00
6.0	32.50	30.50	22.00	12.50	12.00	10.00	8.00
6.5	29.50	28.50	20.60	12.50	12.00	10.00	8.00
7.0	26.80	26.00	19.30	12.50	12.00	10.00	8.00
7.5		24.00	18.20	12.50	12.00	10.00	8.00
8.0		22.00	17.20	12.50	12.00	10.00	8.00
9.0		19.00	15.40	12.50	12.00	10.00	8.00
10.0		16.00	13.90	12.50	10.90	10.00	8.00
11.0		13.20	12.20	11.30	10.00	9.20	8.00
12.0		11.00	10.70	10.30	9.20	8.40	8.00
13.0		9.30	9.00	9.30	8.40	7.80	7.30
14.0			7.60	8.50	7.80	7.20	6.80
15.0			6.45	7.45	7.30	6.60	6.30
16.0			5.50	6.50	6.80	6.20	5.80
17.0			4.70	5.65	6.25	5.80	5.40
18.0			4.00	4.95	5.50	5.40	5.10
19.0			3.40	4.30	4.90	5.10	4.80
20.0			2.85	3.80	4.35	4.55	4.50
21.0				3.30	3.85	4.10	4.20
22.0				2.90	3.40	3.65	3.80
24.0				2.15	2.70	2.90	3.05
26.0				1.60	2.10	2.30	2.40
28.0					1.60	1.80	1.90
30.0					1.20	1.35	1.50
32.0					0.85	1.00	1.10
33.0						0.85	0.95
34.0						0.70	0.80
35.0						0.55	0.70
36.0							0.55
Critical boom angle	—	—	—	—	—	*23°*	*29°*
Standard hook	for 70*/48 ton	for 34 ton					
Hook mass	530*/470kg	330kg					
Parts of line	16*/10	7	5	4	4	4	4

شرکت ایمن مرکزی ارند (سهامی خاص)
نمایندگی رسمی فروش و خدمات پس از فروش
جرثقیل های کاتو و هیتاچی سومیتومو در ایران

44.5m Boom+8.3m SLJib

(7.6m)

Outriggers fully extended (7.6m) (over side and over rear)

Boom angle (°)	Offset 7° Working radius (m)	Offset 7° Load (ton)	Offset 25° Working radius (m)	Offset 25° Load (ton)	Offset 45° Working radius (m)	Offset 45° Load (ton)	Offset 60° Working radius (m)	Offset 60° Load (ton)
84	5.8	4.00	8.6	3.00	10.4	1.90	11.2	1.00
80	10.3	4.00	12.8	3.00	14.4	1.90	14.7	1.00
77	13.4	4.00	15.8	3.00	17.0	1.85	17.3	1.00
75	15.5	4.00	17.5	3.00	18.7	1.80	19.0	1.00
73	17.3	3.70	19.3	2.75	20.3	1.75	20.7	1.00
70	19.9	3.20	21.8	2.45	22.8	1.65	23.1	1.00
68	21.7	2.90	23.5	2.25	24.5	1.60	24.6	1.00
65	24.1	2.30	25.8	2.05	26.8	1.55	26.8	1.00
63	25.7	1.80	27.3	1.70	28.3	1.50	28.2	1.00
60	27.7	1.35	29.4	1.20	30.3	1.15		
57	29.8	0.90	31.4	0.80	32.3	0.75		
54	31.8	0.55	33.4	0.45	34.0	0.45		
Critical boom angle	53°		53°		53°		62°	
Standard hook	for 5 ton (Hook mass : 120kg)							
Parts of line	1							

(7.2m)

Outriggers intermediately extended (7.2m) (over side)

Boom angle (°)	Offset 7° Working radius (m)	Offset 7° Load (ton)	Offset 25° Working radius (m)	Offset 25° Load (ton)	Offset 45° Working radius (m)	Offset 45° Load (ton)	Offset 60° Working radius (m)	Offset 60° Load (ton)
84	5.8	4.00	8.6	3.00	10.4	1.90	11.2	1.00
80	10.3	4.00	12.8	3.00	14.4	1.90	14.7	1.00
77	13.4	4.00	15.8	3.00	17.0	1.85	17.3	1.00
75	15.5	4.00	17.5	3.00	18.7	1.80	19.0	1.00
73	17.3	3.70	19.3	2.75	20.3	1.75	20.7	1.00
70	19.9	3.20	21.8	2.45	22.8	1.65	23.1	1.00
68	21.7	2.80	23.5	2.25	24.5	1.60	24.6	1.00
65	23.8	2.10	25.7	1.85	26.8	1.55	26.8	1.00
63	25.3	1.65	27.1	1.45	28.2	1.40	28.2	1.00
60	27.5	1.10	29.3	1.00	30.2	0.95		
57	29.6	0.70	31.3	0.60	32.2	0.55		
Critical boom angle	56°		56°		56°		62°	
Standard hook	for 5 ton (Hook mass : 120kg)							
Parts of line	1							

(6.5m)

Outriggers intermediately extended (6.5m) (over side)

Boom angle (°)	Offset 7° Working radius (m)	Offset 7° Load (ton)	Offset 25° Working radius (m)	Offset 25° Load (ton)	Offset 45° Working radius (m)	Offset 45° Load (ton)	Offset 60° Working radius (m)	Offset 60° Load (ton)
84	5.8	4.00	8.6	3.00	10.4	1.90	11.2	1.00
80	10.3	4.00	12.8	3.00	14.4	1.90	14.7	1.00
77	13.4	4.00	15.8	3.00	17.0	1.85	17.3	1.00
75	15.5	4.00	17.5	3.00	18.7	1.80	19.0	1.00
73	17.3	3.70	19.3	2.75	20.3	1.75	20.7	1.00
70	19.7	2.90	21.8	2.45	22.8	1.65	23.1	1.00
68	21.2	2.35	23.3	2.00	24.5	1.60	24.6	1.00
65	23.5	1.60	25.5	1.40	26.7	1.30	26.8	1.00
63	25.0	1.20	27.0	1.00	28.1	0.95	28.2	1.00
60	27.2	0.65	29.1	0.60	30.1	0.55		
Critical boom angle	59°		59°		59°		62°	
Standard hook	for 5 ton (Hook mass : 120kg)							
Parts of line	1							

(5.4m)

Outriggers intermediately extended (5.4m) (over side)

Boom angle (°)	Offset 7° Working radius (m)	Offset 7° Load (ton)	Offset 25° Working radius (m)	Offset 25° Load (ton)	Offset 45° Working radius (m)	Offset 45° Load (ton)	Offset 60° Working radius (m)	Offset 60° Load (ton)
84	5.8	4.00	8.6	3.00	10.4	1.90	11.2	1.00
80	10.3	4.00	12.8	3.00	14.4	1.90	14.7	1.00
77	13.4	4.00	15.8	3.00	17.0	1.85	17.3	1.00
75	15.1	3.60	17.5	3.00	18.7	1.80	19.0	1.00
73	16.7	3.00	19.0	2.55	20.3	1.75	20.7	1.00
70	19.1	2.10	21.4	1.65	22.7	1.55	23.1	1.00
68	20.7	1.50	23.0	1.20	24.3	1.10	24.6	1.00
Critical boom angle	67°		67°		67°		67°	
Standard hook	for 5 ton (Hook mass : 120kg)							
Parts of line	1							

(4.3m)

Outriggers intermediately extended (4.3m) (over side)

Boom angle (°)	Offset 7° Working radius (m)	Offset 7° Load (ton)	Offset 25° Working radius (m)	Offset 25° Load (ton)	Offset 45° Working radius (m)	Offset 45° Load (ton)	Offset 60° Working radius (m)	Offset 60° Load (ton)
84	5.8	4.00	8.6	3.00	10.4	1.90	11.2	1.00
80	10.3	4.00	12.8	3.00	14.4	1.90	14.7	1.00
77	13.0	3.40	15.8	2.55	17.0	1.85	17.3	1.00
75	14.8	2.45	17.2	2.00	18.7	1.70	19.0	1.00
73	16.5	1.75	18.8	1.40	20.3	1.30	20.7	1.00
Critical boom angle	72°		72°		72°		72°	
Standard hook	for 5 ton (Hook mass : 120kg)							
Parts of line	1							

Outriggers extended (over front)

Boom angle (°)	Offset 7° Working radius (m)	Offset 7° Load (ton)	Offset 25° Working radius (m)	Offset 25° Load (ton)	Offset 45° Working radius (m)	Offset 45° Load (ton)	Offset 60° Working radius (m)	Offset 60° Load (ton)
84	5.8	4.00	8.6	3.00	10.4	1.90	11.2	1.00
80	10.3	4.00	12.8	3.00	14.4	1.90	14.7	1.00
77	13.4	4.00	15.8	3.00	17.0	1.85	17.3	1.00
75	15.5	4.00	17.5	3.00	18.7	1.80	19.0	1.00
73	17.3	3.70	19.3	2.75	20.3	1.75	20.7	1.00
70	19.9	3.20	21.8	2.45	22.8	1.65	23.1	1.00
68	21.7	2.90	23.5	2.25	24.5	1.60	24.6	1.00
65	24.1	2.45	25.8	2.05	26.8	1.55	26.8	1.00
63	25.7	2.25	27.4	1.90	28.3	1.50	28.2	1.00
60	27.9	1.75	29.6	1.60	30.3	1.45		
57	30.0	1.30	31.7	1.15	32.3	1.15		
54	32.0	0.90	33.6	0.80	34.0	0.80		
49	35.2	0.40	36.5	0.35	37.0	0.35		
Critical boom angle	48°		48°		48°		62°	
Standard hook	for 5 ton (Hook mass : 120kg)							
Parts of line	1							

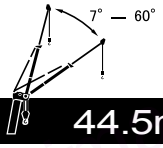

44.5m Boom+13.2m SLJib

(7.6m)

Outriggers fully extended (7.6m) (over side and over rear)

Boom angle (°)	Offset 7° Working radius (m)	Offset 7° Load (ton)	Offset 25° Working radius (m)	Offset 25° Load (ton)	Offset 45° Working radius (m)	Offset 45° Load (ton)	Offset 60° Working radius (m)	Offset 60° Load (ton)
84	7.2	2.50	11.0	1.50	14.3	1.00	15.7	0.60
80	11.8	2.50	15.5	1.50	18.2	1.00	19.5	0.60
77	15.3	2.50	18.6	1.50	21.0	1.00	22.2	0.60
75	17.5	2.50	20.6	1.50	22.9	1.00	23.8	0.60
73	19.6	2.50	22.5	1.45	24.8	1.00	25.4	0.60
70	22.5	2.20	25.2	1.40	27.3	1.00	27.8	0.60
68	24.5	2.05	27.0	1.35	29.0	1.00	29.4	0.60
65	27.2	1.85	29.6	1.30	31.4	1.00	31.5	0.60
63	28.9	1.50	31.2	1.25	32.9	0.95	32.9	0.60
60	31.2	1.05	33.6	0.95	35.3	0.90		
58	32.5	0.85	35.2	0.70	36.5	0.70		
55	34.5	0.55	37.2	0.40	38.3	0.40		
Critical boom angle	54°		54°		54°		62°	
Standard hook	for 5 ton (Hook mass : 120kg)							
Parts of line	1							

(7.2m)

Outriggers intermediately extended (7.2m) (over side)

Boom angle (°)	Offset 7° Working radius (m)	Offset 7° Load (ton)	Offset 25° Working radius (m)	Offset 25° Load (ton)	Offset 45° Working radius (m)	Offset 45° Load (ton)	Offset 60° Working radius (m)	Offset 60° Load (ton)
84	7.2	2.50	11.0	1.50	14.3	1.00	15.7	0.60
80	11.8	2.50	15.5	1.50	18.2	1.00	19.5	0.60
77	15.3	2.50	18.6	1.50	21.0	1.00	22.2	0.60
75	17.5	2.50	20.6	1.50	22.9	1.00	23.8	0.60
73	19.6	2.50	22.5	1.45	24.8	1.00	25.4	0.60
70	22.5	2.20	25.2	1.40	27.3	1.00	27.8	0.60
68	24.5	2.05	27.0	1.35	29.0	1.00	29.4	0.60
65	27.1	1.65	29.6	1.30	31.4	1.00	31.5	0.60
63	28.7	1.30	31.1	1.20	32.9	0.95	32.9	0.60
60	31.0	0.85	33.4	0.80	34.9	0.75		
58	32.3	0.65	34.9	0.55	36.2	0.45		
Critical boom angle	57°		57°		57°		62°	
Standard hook	for 5 ton (Hook mass : 120kg)							
Parts of line	1							

(6.5m)

Outriggers intermediately extended (6.5m) (over side)

Boom angle (°)	Offset 7° Working radius (m)	Offset 7° Load (ton)	Offset 25° Working radius (m)	Offset 25° Load (ton)	Offset 45° Working radius (m)	Offset 45° Load (ton)	Offset 60° Working radius (m)	Offset 60° Load (ton)
84	7.2	2.50	11.0	1.50	14.3	1.00	15.7	0.60
80	11.8	2.50	15.5	1.50	18.2	1.00	19.5	0.60
77	15.3	2.50	18.6	1.50	21.0	1.00	22.2	0.60
75	17.5	2.50	20.6	1.50	22.9	1.00	23.8	0.60
73	19.6	2.50	22.5	1.45	24.8	1.00	25.4	0.60
70	22.5	2.20	25.2	1.40	27.3	1.00	27.8	0.60
68	24.2	1.80	27.0	1.35	29.0	1.00	29.4	0.60
65	26.6	1.25	29.4	1.10	31.4	1.00	31.5	0.60
63	28.3	0.90	31.0	0.80	32.7	0.70	32.9	0.60
Critical boom angle	62°		62°		62°		62°	
Standard hook	for 5 ton (Hook mass : 120kg)							
Parts of line	1							

(5.4m)

Outriggers intermediately extended (5.4m) (over side)

Boom angle (°)	Offset 7° Working radius (m)	Offset 7° Load (ton)	Offset 25° Working radius (m)	Offset 25° Load (ton)	Offset 45° Working radius (m)	Offset 45° Load (ton)	Offset 60° Working radius (m)	Offset 60° Load (ton)
84	7.2	2.50	11.0	1.50	14.3	1.00	15.7	0.60
80	11.8	2.50	15.5	1.50	18.2	1.00	19.5	0.60
77	15.3	2.50	18.6	1.50	21.0	1.00	22.2	0.60
75	17.5	2.50	20.6	1.50	22.9	1.00	23.8	0.60
73	19.5	2.35	22.5	1.45	24.8	1.00	25.4	0.60
70	22.0	1.60	25.0	1.30	27.3	1.00	27.8	0.60
68	23.5	1.20	26.8	0.90	28.9	0.85	29.4	0.60
Critical boom angle	67°		67°		67°		67°	
Standard hook	for 5 ton (Hook mass : 120kg)							
Parts of line	1							

(4.3m)

Outriggers intermediately extended (4.3m) (over side)

Boom angle (°)	Offset 7° Working radius (m)	Offset 7° Load (ton)	Offset 25° Working radius (m)	Offset 25° Load (ton)	Offset 45° Working radius (m)	Offset 45° Load (ton)	Offset 60° Working radius (m)	Offset 60° Load (ton)
84	7.2	2.50	11.0	1.50	14.3	1.00	15.7	0.60
80	11.8	2.50	15.5	1.50	18.2	1.00	19.5	0.60
77	15.3	2.50	18.6	1.50	21.0	1.00	22.2	0.60
75	17.0	2.00	20.6	1.50	22.9	1.00	23.8	0.60
73	18.8	1.40	22.3	1.10	24.6	1.00	25.4	0.60
Critical boom angle	72°		72°		72°		72°	
Standard hook	for 5 ton (Hook mass : 120kg)							
Parts of line	1							

Outriggers extended (over front)

Boom angle (°)	Offset 7° Working radius (m)	Offset 7° Load (ton)	Offset 25° Working radius (m)	Offset 25° Load (ton)	Offset 45° Working radius (m)	Offset 45° Load (ton)	Offset 60° Working radius (m)	Offset 60° Load (ton)
84	7.2	2.50	11.0	1.50	14.3	1.00	15.7	0.60
80	11.8	2.50	15.5	1.50	18.2	1.00	19.5	0.60
77	15.3	2.50	18.6	1.50	21.0	1.00	22.2	0.60
75	17.5	2.50	20.6	1.50	22.9	1.00	23.8	0.60
73	19.6	2.50	22.5	1.45	24.8	1.00	25.4	0.60
70	22.5	2.20	25.2	1.40	27.3	1.00	27.8	0.60
68	24.5	2.05	27.0	1.35	29.0	1.00	29.4	0.60
65	27.2	1.85	29.6	1.30	31.4	1.00	31.5	0.60
63	28.9	1.70	31.2	1.25	32.9	0.95	32.9	0.60
60	31.4	1.45	33.8	1.20	35.3	0.90		
58	32.9	1.15	35.3	1.05	36.6	0.90		
55	35.0	0.80	37.3	0.75	38.5	0.70		
50	37.9	0.45	40.0	0.40	40.8	0.40		
Critical boom angle	49°		49°		49°		62°	
Standard hook	for 5 ton (Hook mass : 120kg)							
Parts of line	1							

شرکت ایمن مرکزی اروند (سهامی خاص)
نمایندگی رسمی فروش و خدمات پس از فروش
جرثقیل های کاتو و هیتاچی سومیتومو در ایران

■When the outriggers are not used

(Unit : Metric ton)

Working radius (m)	Stationary on rubber						Pick & carry (less than 2 km/h)						Working radius (m)
	10.0m Boom		16.9m Boom		23.8m Boom		10.0m Boom		16.9m Boom		23.8m Boom		
	Over front	360° full range	Over front	360° full range	Over front	360° full range	Over front	360° full range	Over front	360° full range	Over front	360° full range	
3.5	20.00	12.00	15.00	8.50	9.00	4.50	14.50	8.00	10.50	6.50	7.50	3.30	3.5
4.0	20.00	9.80	15.00	8.50	9.00	4.50	14.50	7.00	10.50	6.50	7.50	3.30	4.0
4.5	17.40	8.00	15.00	7.20	9.00	4.50	12.50	6.00	10.50	5.40	7.50	3.30	4.5
5.0	15.50	6.60	15.00	6.10	9.00	4.50	11.00	5.10	10.50	4.50	7.50	3.30	5.0
5.5	14.00	5.50	13.70	5.10	9.00	4.50	10.00	4.30	10.50	3.75	7.50	3.30	5.5
6.0	12.80	4.65	12.40	4.25	9.00	3.80	9.10	3.60	9.50	3.15	7.50	2.90	6.0
6.5	11.70	3.90	11.30	3.60	8.60	3.20	8.40	3.00	8.60	2.70	7.00	2.50	6.5
7.0	10.70	3.20	10.30	3.00	8.20	2.70	7.80	2.50	7.80	2.25	6.55	2.00	7.0
7.5			9.40	2.50	7.80				7.10	1.85	6.10		7.5
8.0			8.60	1.90	7.40				6.50	1.50	5.70		8.0
8.5			7.70	1.40	7.00				5.85	1.20	5.35		8.5
9.0			7.00		6.60				5.30	0.90	5.00		9.0
10.0			5.70		5.50				4.30		4.10		10.0
11.0			4.75		4.60				3.50		3.35		11.0
12.0			4.00		3.75				2.90		2.65		12.0
13.0			3.35		3.05				2.45		2.00		13.0
14.0					2.50						1.50		14.0
15.0					2.00						1.00		15.0
16.0					1.60								16.0
17.0					1.20								17.0
18.0					0.80								18.0
Critical boom angle	—	—	—	*49°*	*30°*	*68°*	—	—	—	*49°*	*41°*	*68°*	Critical boom angle
Standard hook	for 34 ton						for 34 ton						Standard hook
Hook mass	330kg						330kg						Hook mass
Parts of line	5						5						Parts of line

شرکت ایمن مرکزی اروند (سهامی خاص)
نمایندگی رسمی فروش و خدمات پس از فروش
جرثقیل های کاتو و هیتاچی سومیتومو در ایران

■Notes for the lifting capacity chart

■When the outriggers are used

1. The lifting capacity charts are based on the jib stowed on the boom side.
2. The lifting capacity chart indicates the maximum load which can be lifted by this crane provided it is level and standing on firm level ground. The values in the chart include the mass of the main hook and slings for boom operation, and auxiliary hook and slings for jib operation. [70 ton hook (mass: 530kg), 48 ton hook (mass: 470kg), 34 ton hook (mass: 330kg), 5 ton hook (mass: 120kg)]
   Within the chart the figures in the area bordered with a thick line are based on structural limitations while other figures are determined by stability limitations.
3. The working radii are the actual values allowing for boom and jib deflection. Therefore you must always operate the crane on the basis of the working radius.
4. The jib working radius is based on the jib mounted on the end of the 44.5m boom. When operating at other boom lengths, use the boom angle alone as the criterion.
5. Do not operate the jib when the outriggers are completely retracted.
6. The lifting capacities for the over sides vary with the outrigger extension width. Therefore for each outrigger extension condition you should work according the lifting capacity chart.
   Use the front area lifting capacity chart for the front area lifting capacity, and the lifting capacity chart of outrigger full extension for the rear area lifting capacity.

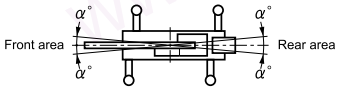

Outrigger extension status	Full extension (7.6m)	Intermediate extension (7.2 — 5.4m)	Intermediate extension (4.3m)	Full retraction
Area α°	Only front area 40	30	15	3

7. The lifting capacity of the rooster sheave is the lifting capacity of the boom minus the mass of all attached hook, slings etc. to the boom, with an upper limit of 5,000kg.
   [The hook for use with the rooster sheave is the 5 ton hook (mass: 120kg) with one part of line.]
8. If the boom length, boom angle jib length, jib angle and/or working radius exceeds the rated value, use the lifting capacity for the rated value or for the next one, whichever gives the smaller lifting capacity.
9. If you are working with the boom while the jib is rigged, subtract 2.6 ton from the each lifting capacity of the boom for the outrigger extension width 7.6m, 7.2m, 6.5m or 5.4m, and 3.0 ton for the outrigger extension width 4.3m, with an upper limit of 18 ton.
   Do not use the rooster sheave in this situation. And do not operate the boom while the jib is rigged, when the outriggers are retracted.
   [The main hook for use with the jib rigged is 34 ton hook (mass: 330kg).]
10. In whatever working conditions the corresponding boom critical angel is shown in the chart. The crane can tip over if the boom is lowered below the critical angle even if unloaded.
    Therefore, never lower the boom below these angles.
11. If you work with 16 parts of line on the hook (with * marked in the lifting capacity chart), use the rooster sheave and sheave bracket.
12. The standard parts of line for each boom length are as indicated in the chart. If you work with a non-standard number of parts of line, do not exceed 45.1kN (4.6tf) per wire rope respectively.
13. Crane operation is permissible up to a wind speed of 10m/s. Even in relatively light wind conditions, extra care should be taken when handling loads presenting large wind catching areas.
14. Kato bears no liability whatsoever for damage, crane tipping or other accident caused by crane operations which differ from the directions contained in the instruction manual and the warning labels.

■When the outriggers are not used

1. The lifting capacity charts are based on the jib stowed on the boom side.
2. The lifting capacity chart indicates the maximum load the crane can lift when its body is level on firm level ground with all tires inflated to the rated pressure and the suspension cylinder completely retracted. The values in the chart include the mass of the main hook and slings.
   Within the chart the figures in the area bordered with a thick line are based on structural limitations while other figures are determined by stability limitations.
   [Tire pressure: 800kPa (8.0kgf/cm^2)]
3. The working radii are the actual values allowing for boom deflection. Therefore you must always operate the crane on the basis of the working radius.
4. The lifting capacity differs between the front area capacity and the full range capacity. When slewing from the front to the side, take care that the crane could not be over loaded.

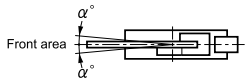

Crane operation	Stationary crane-on-rubber operation	Pick and carry operation
Area α°	1	1

5. The lifting capacity of the rooster sheave is the lifting capacity of the boom minus the mass of the 34 ton hook (330kg), with an upper limit of 5,000kg.
   [The hook for use with the rooster shave is the 5 ton hook (mass: 120kg) with one part of line.]
6. Do not work with the jib or with a boom length of more than 23.8m.
7. For stationary crane-on-rubber operation, the parking brake and service brake lock device must be engaged.
8. For pick and carry operation, the super-slow speed switch must be switched to "ON" and the shift lever set to speed 1.
9. For pick and carry operation, lower the load to just above the ground and keep your speed strictly below 2km/h to avoid swinging the load.
   Take particular care to avoid sharp turns, sudden starts and stops.
10. Never operate the crane during pick and carry operation. The slewing brake must be applied.
11. If the boom length or working radius exceeds the rated value, use the lifting capacity for the rated value or for the next one, whichever gives the smaller lifting capacity.
12. In whatever working conditions the corresponding boom critical angel is shown in the chart. The crane can tip over if the boom is lowered below the critical angle even if unloaded.
    Therefore, never lower the boom below these angles.
13. The standard parts of line for each boom length are as indicated in the chart. If you work with a non-standard number of parts of line, do not exceed 45.1kN (4.6tf) per wire rope respectively.
14. Crane operation is permissible up to a wind speed of 10m/s. Even in relatively light wind conditions, extra care should be taken when handling loads presenting large wind catching areas.
15. Kato bears no liability whatsoever for damage, crane tipping or other accident caused by crane operations which differ from the directions contained in the instruction manual and the warning labels.

شرکت ایمن مرکزی اروند (سهامی خاص)
نمایندگی رسمی فروش و خدمات پس از فروش
جرثقیل های کاتو و هیتاچی سومیتومو در ایران

■WORKING RANGE

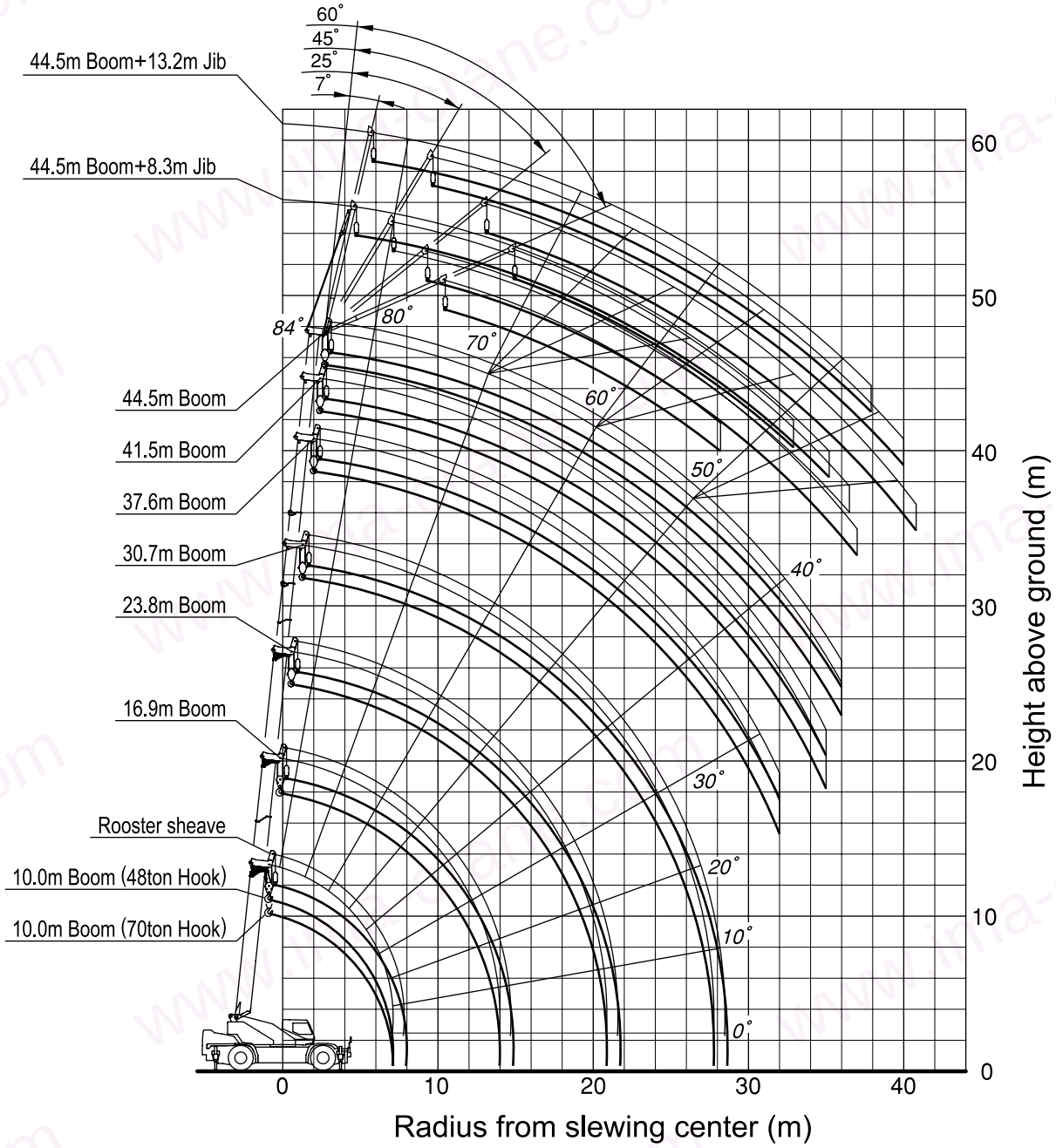

Note:
1. This diagram does not include deflection of Boom and Fly jib.
2. The outriggers are extended (over front).

شرکت ایمن مرکزی اروند (سهامی خاص)
نمایندگی رسمی فروش و خدمات پس از فروش
جرثقیل های کاتو و هیتاچی سومیتومو در ایران

■Minimum path width

●Left turn in two-wheel steering mode

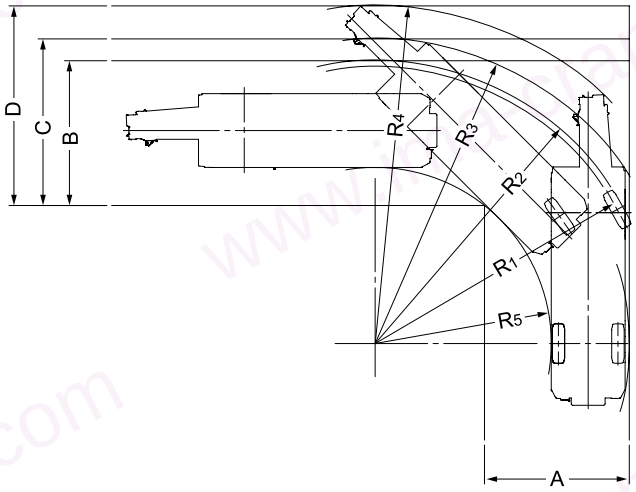

- R_1=11.20m (Minimum turning radius)
- R_2=11.45m (Turning radius of extremely outer tyre)
- R_3=12.34m (Chassis turning radius)
- R_4=13.70m (Boom end turning radius)
- R_5=7.13m (Turning radius extremely chassis inner)

- A=5.86m (Width of entrance)
- B=5.86m (Width of wheel exit)
- C=6.75m (Width of chassis exit)
- D=8.11m (Width of exit at end of boom)

●Left turn in 4-wheel steering mode

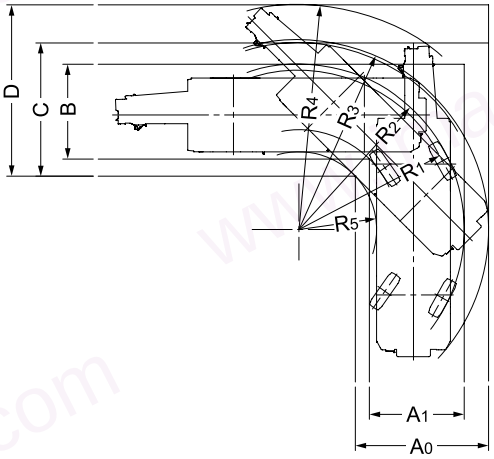

- R_1=6.44m (Minimum turning radius)
- R_2=6.69m (Turning radius of extremely outer tyre)
- R_3=7.68m (Chassis turning radius)
- R_4=9.13m (Boom end turning radius)
- R_5=3.14m (Turning radius extremely chassis inner)

- A_0=5.39m (Width of entrance)
- A_1=3.84m (Width of wheel entrance)
- B =3.84m (Width of wheel exit)
- C =5.39m (Width of chassis exit)
- D =6.90m (Width of exit at end of boom)

Note: The above values are based on calculations.

■Overall view

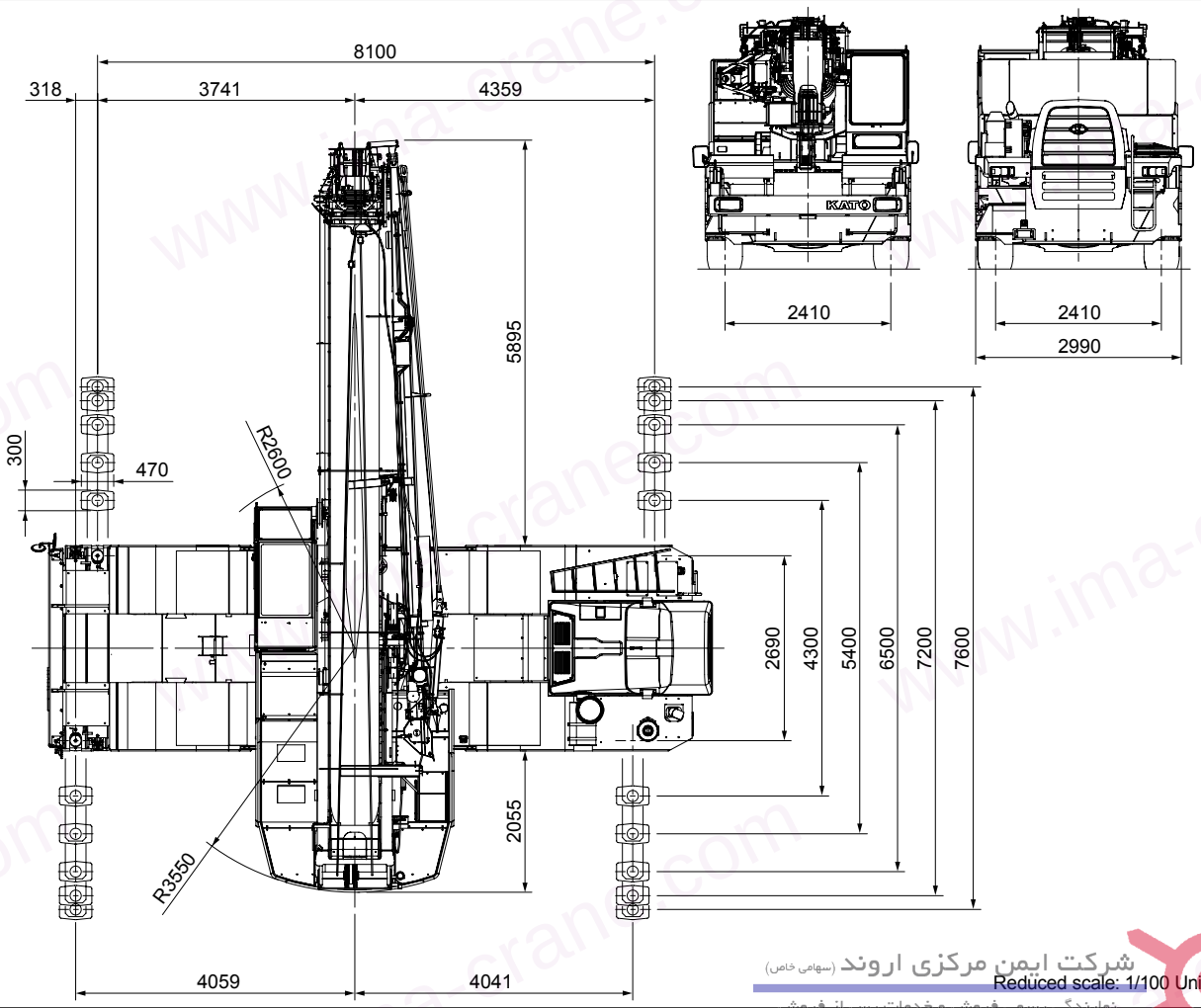

Reduced scale: 1/100 Unit (mm)

شرکت ایمن مرکزی اروند (سهامی خاص)
نمایندگی رسمی فروش و خدمات پس از فروش
جرثقیل های کاتو و هیتاچی سومیتومو در ایران

■Overall view

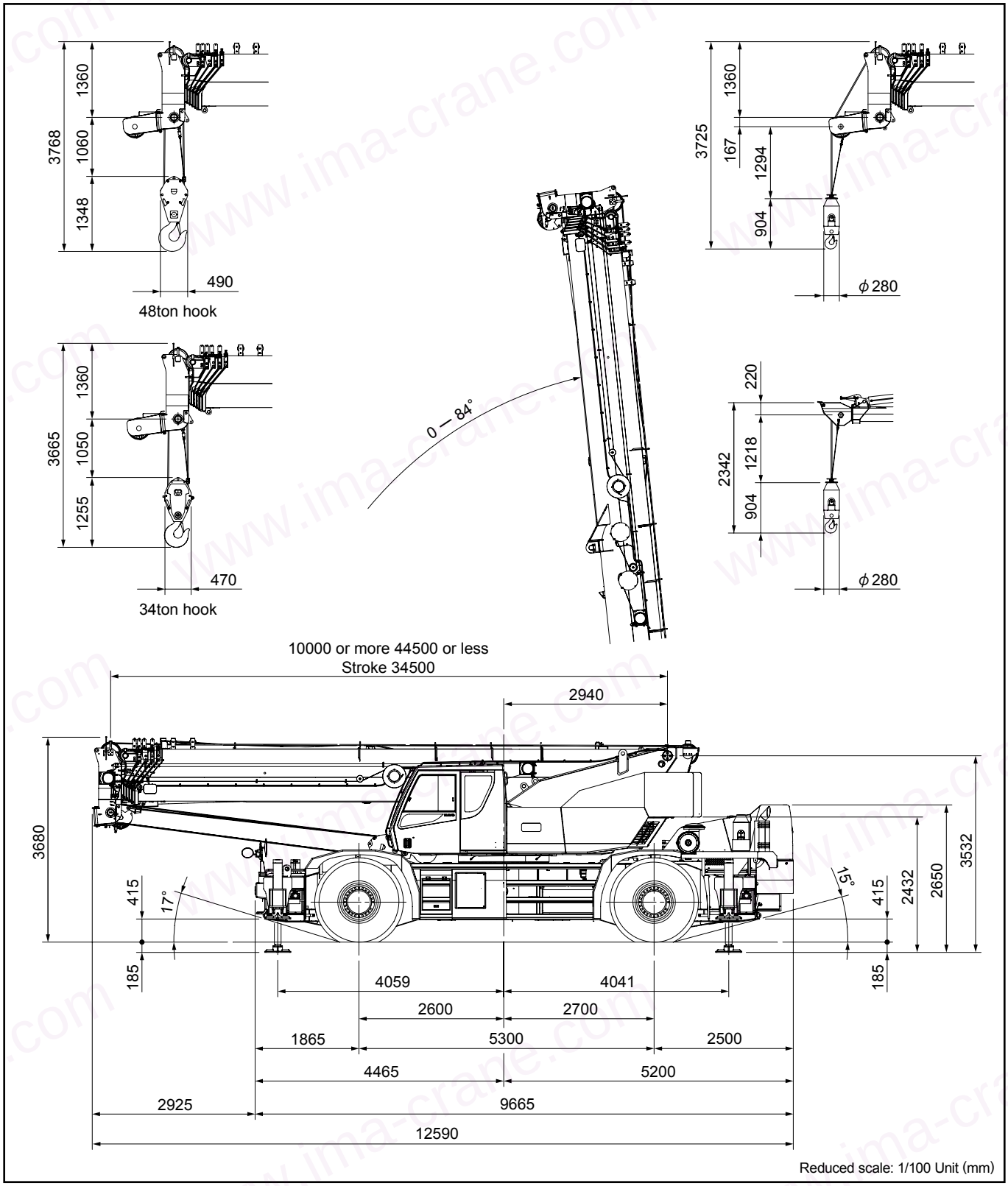

Reduced scale: 1/100 Unit (mm)

* KATO products and specifications are subject to improvements and changes without notice.

Address inquiries to:

KATO
KATO WORKS CO.,LTD.
9-37, Higashi-ohi 1-chome,Shinagawa-ku, Tokyo, 140-0011, Japan
Tel. : Head Office Tokyo (03) 3458-1111
Overseas Marketing Department. Tokyo (03) 3458-1115
Fax. : Tokyo (03) 3458-1163
URL http://www.kato-works.co.jp

C02651
10.2008-3000 (TD) 1
1.2012-1000 (TD) 1-3-3

ISO 9001 BUREAU VERITAS Certification
We acquired the "ISO 9001" certification which is an international standard for quality assurance.
شرکت مرکزی اروند (سهامی خاص)
فروش و خدمات پس از فروش
چرخهای کاتو و هیتاچی سومیتومو